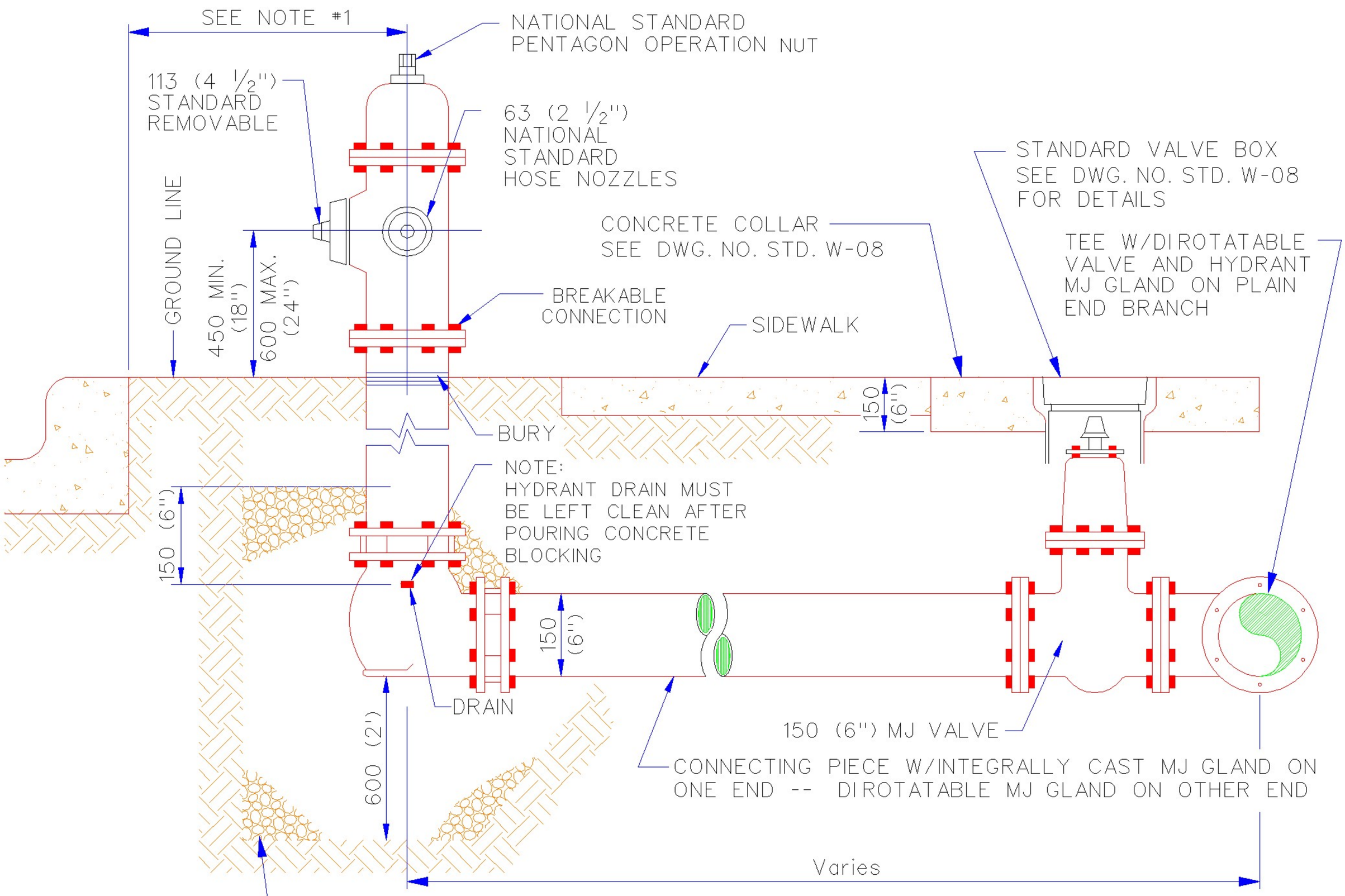

SIDE VIEW

(TYPICAL FOR FIRE HYDRANT ON LOCAL STREET)

WASHED ROCK
37.5 mm (1 1/2") CLASS "C"

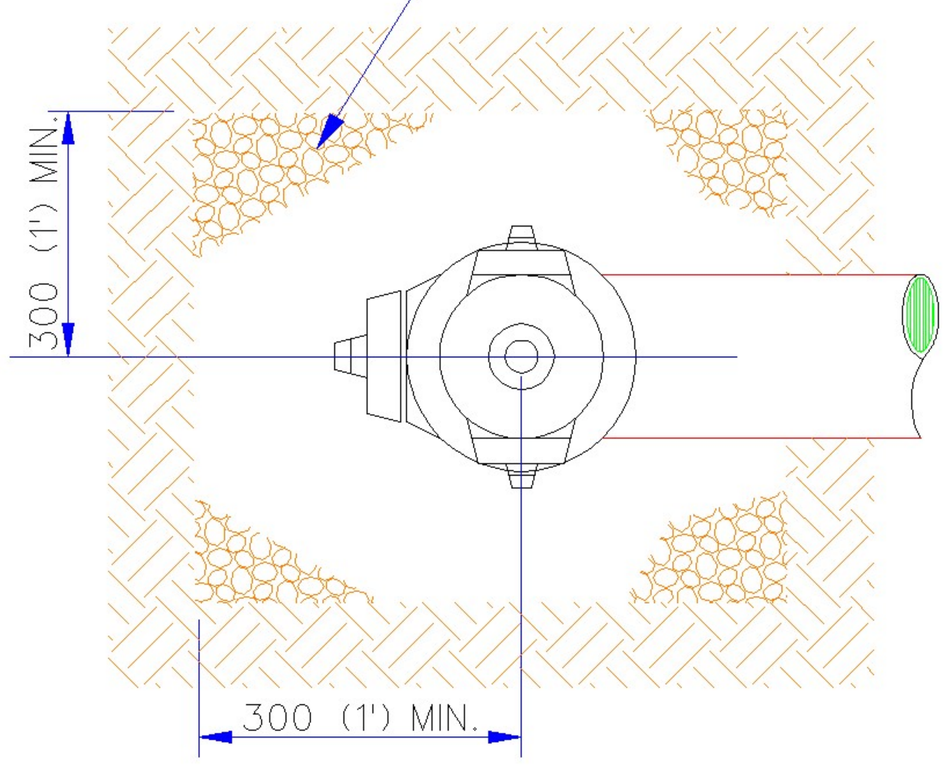

TOP VIEW

NOTE #1: 90 min. to 1830 max. (3'-0" min. to 6'-0" max.)
(See Section 2002.8 of 'Engineering Design Criteria' for exceptions and additional informantion)

ASSEMBLY INCLUDES

3-WAY FIRE HYDRANT
150 mm (6") CONNECTING PIECE
150 mm (6") MJ GATE VALVE
150 mm (6") VALVE & HYDRANT TEE
VALVE BOX

METRIC UNITS ARE IN MM WITH ENGLISH UNITS IN PARENTHESIS, UNLESS INDICATED OTHERWISE.

FIRE HYDRANT ASSEMBLY

City Engineer Approval:		CITY OF NORMAN, OKLAHOMA	
Approval Date:	Revision Date: 12-17-2004	Rev. No. 3	DRAWING NO. W 09a